未注公差/General tolerances(mm)														
0 ~ 3	>3 ~ 6	>6 ~ 10	>10 ~ 18	>18 ~ 30	>30 ~ 50	>50 ~ 80	>80 ~ 120	>120 ~ 180	>180 ~ 250	>250 ~ 315	>315 ~ 400	>400 ~ 500	>500	0.1/10
±0.12	±0.18	±0.22	±0.26	±0.31	±0.37	±0.57	±0.80	±0.93	±1.05	±1.15	±1.60	±2.20	±2.50	±2°

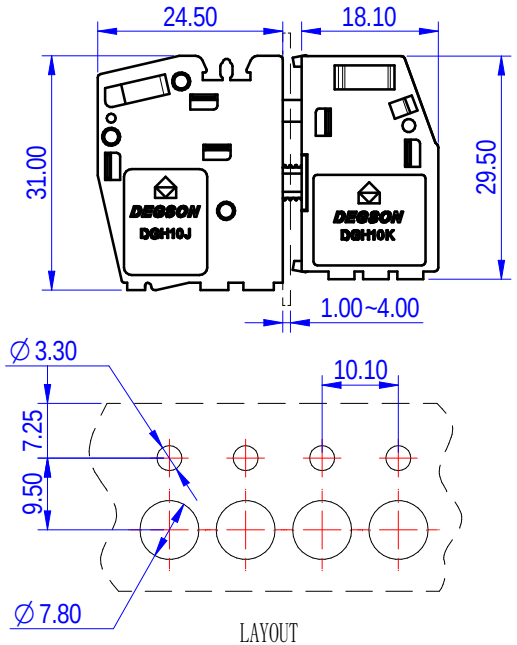

LAYOUT

DGH10J-01P-1Y-1000A&Z(H)

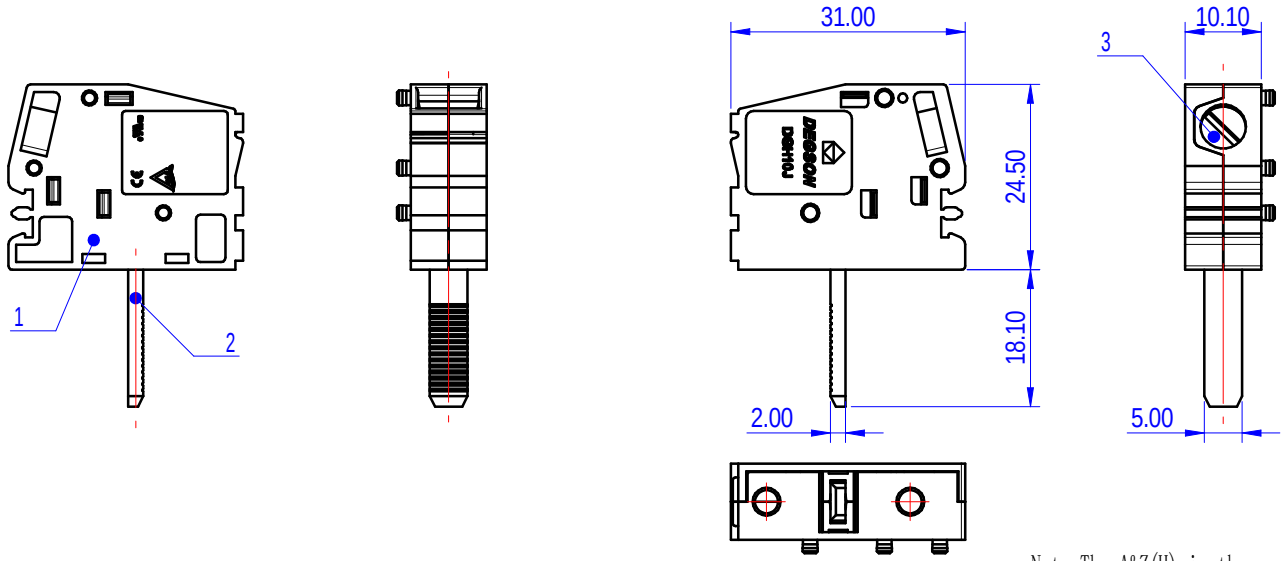

Note:The A&Z(H) in the name means:A(H) and Z(H).

DGH10K-01P-1Y-1000A&Z(H)

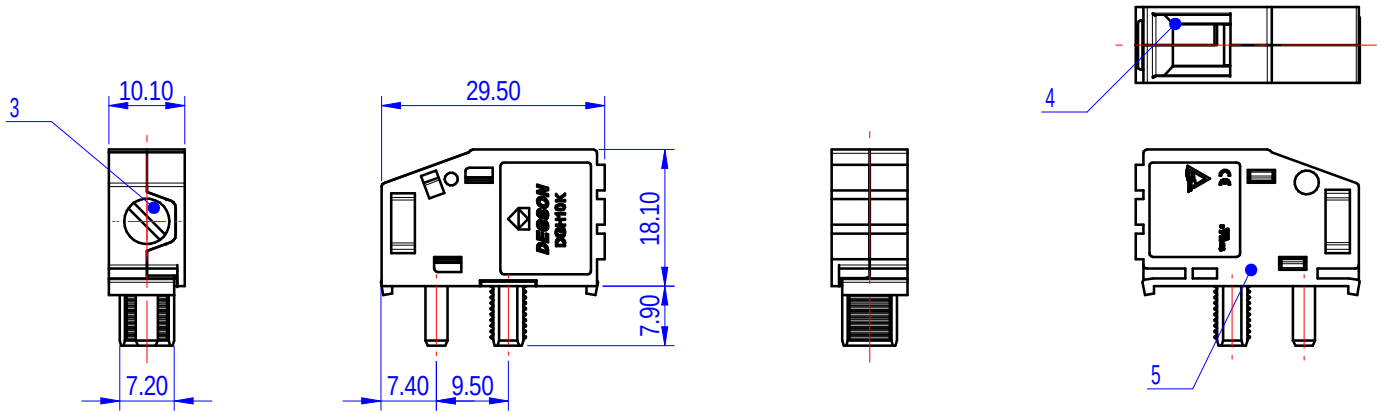

ITEM	NAME OF PART	MATERIAL	NOTES
5	Housing-K	PA66	UL94V-0
4	Cage	Copper alloy	Ni Plated
3	Screw	Steel	Zn Plated
2	Current carrier	Copper	Sn Plated
1	Housing-J	PA66	UL94V-0

	B	C	D
UL 标准/UL Standard:			
额定电压/电流/Rated Voltage(V)/Current(A)	300/65	/	300/10
IEC 标准/IEC Standard:			
过压类别/Overvoltage Category/污染等级/Pollution Degree	III/3	III/2	II/2
额定电压/电流/Rated Voltage(V)/Current(A)	500/76	/	/
额定脉冲电压(KV)/Rate Impulse Voltage(KV)	6	/	/
螺丝扭矩/Torque Tightening(N·m/Lb.in)	M4, 1.2/10.53		
线径范围(硬线和软线)/Wire Range(rigid and flexible)(AWG/mm²)	24~6 / 0.5~16		
间距/Pitch(mm)/线数范围/Poles	10.10/N=01P		
剥线长度/Stripping length(mm)	10		
使用温度范围/Operating temperature(°C)	-40~+105		
符合RoHS环保要求/Conform to RoHS	Yes		

DEGSON

APPD:	核准人	核准日期
CHKD:	审核人	审核日期
DRFT:	设计人	设计日期

A4 mm (inch)

MATERIAL: 材质 | SURFACE/COLOR: 表面处理

MAT NO./REV: 物料编码 / 版本 | MAT STATUS: 物料状态

NAME: DHG10-01P-1Y-1000A&Z(H)

DRAWING NO.	TYPE	DRAWING STATUS	SCALE	SHEET
图号	图纸类型	图纸状态	1:1	1/1

图纸版本	ECN	变更描述	设计人	设计日期
REV	ECN	DESCRIPTION	DRFT	DATE

Transfer or duplication of this document as well as the utilization or communication of its contents are prohibited unless explicit authorization is granted. Violations will be liable for compensation. All rights reserved for patent, utility model or designs registrations. 除非经予明确授权，否则禁止转让、复制、利用、交流本文件的内容。侵犯专利权或外观设计专利的所有权利。